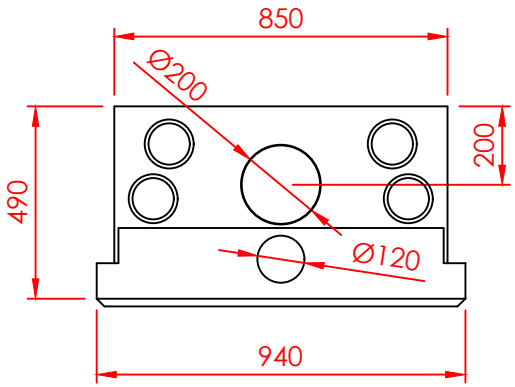


Top

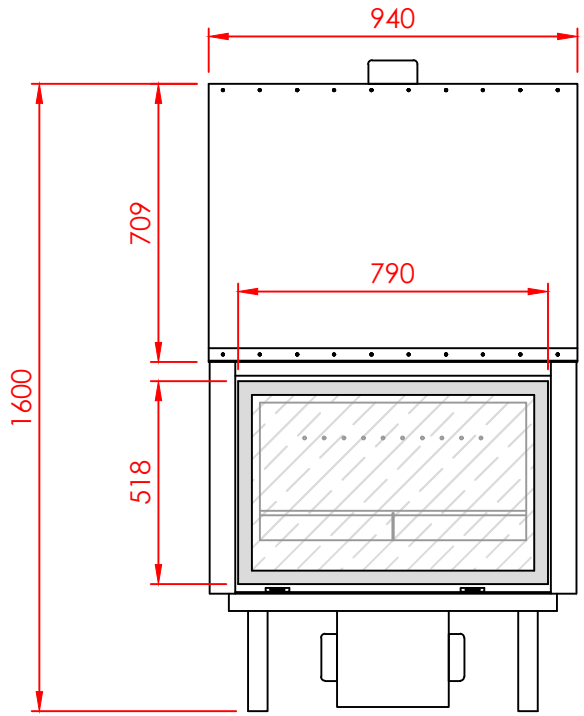


Front

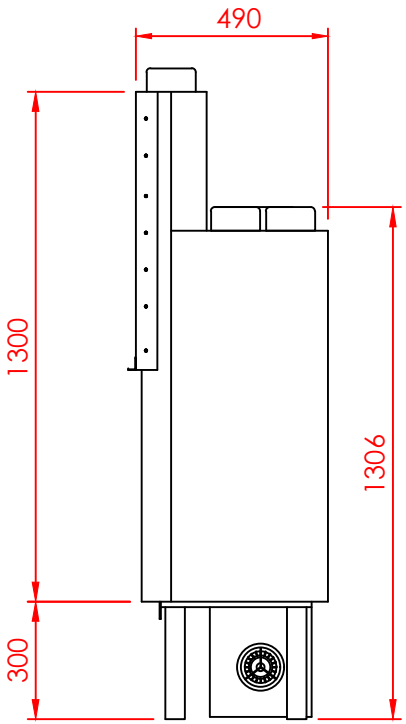


Side

| | |
|---|---|
| Series: | **FLAT** |
| Model: | MAJARDA |
| Type: | D80 |
| Specials: | AERO |

All dimensions in mm
General dimension tolerances up to 7mm

All illustrations and drawings are protected by copyright.
Exploitation or publication, even of individual details,
only with our permission.
Technical changes and errors reserved.

REGALFIRE
Nea Redestos. Thermi, 57001
Thessaloniki GREECE
t: +30 2310 461386 f: +30 2310 461493
e: info@regal.com.gr
www.tzakiaregal.gr | www.regal.com.gr