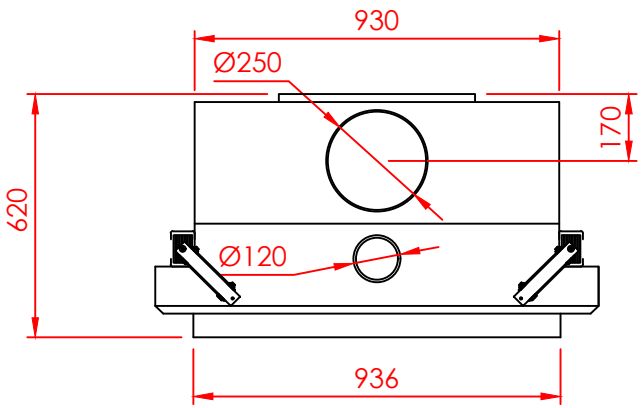

Top

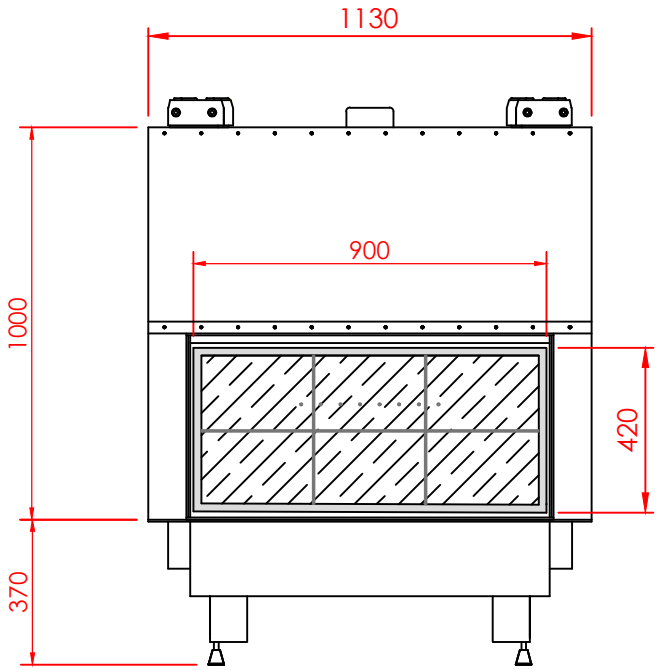

Front

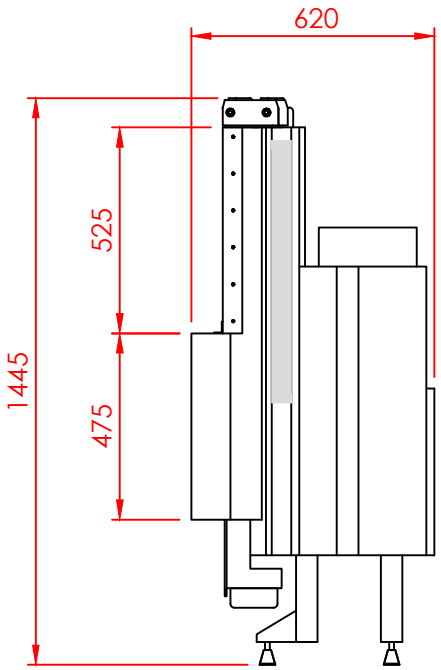

Side

Series:	FLAT
Model:	Architectural
Type:	90x42
Specials:	STD

All dimensions in mm
General dimension tolerances up to 7mm
All illustrations and drawings are protected by copyright.
Exploitation or publication, even of individual details,
only with our permission.
Technical changes and errors reserved.

REGALFIRE
Nea Redestos. Thermi, 57001
Thessaloniki GREECE
t: +30 2310 461386 f: +30 2310 461493
e: info@regal.com.gr
www.tzakiaregal.gr | www.regal.com.gr

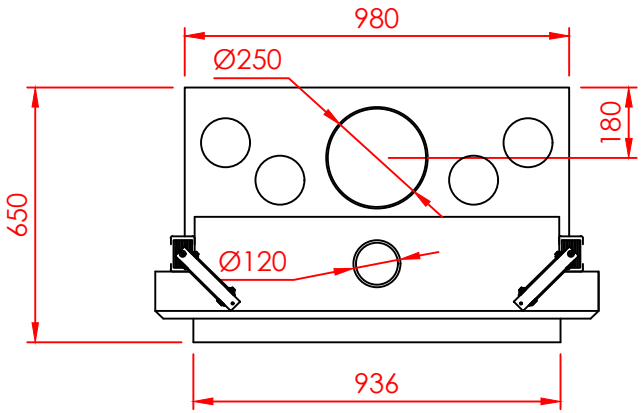

Top

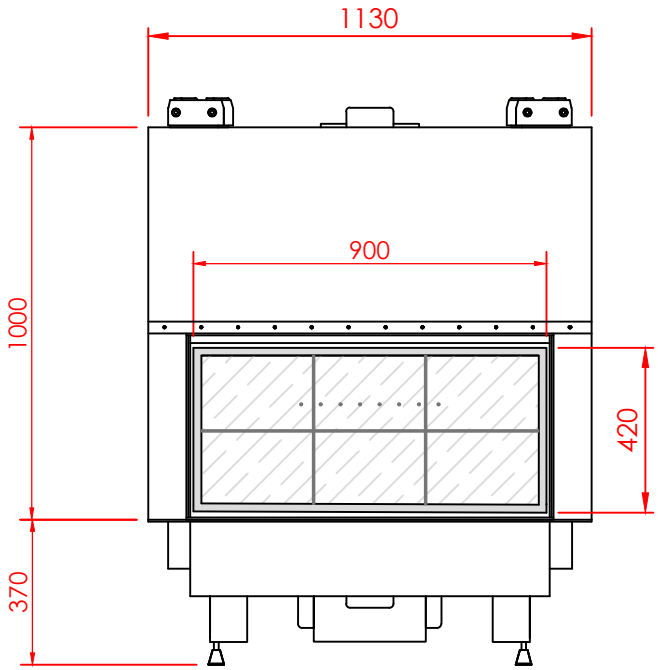

Front

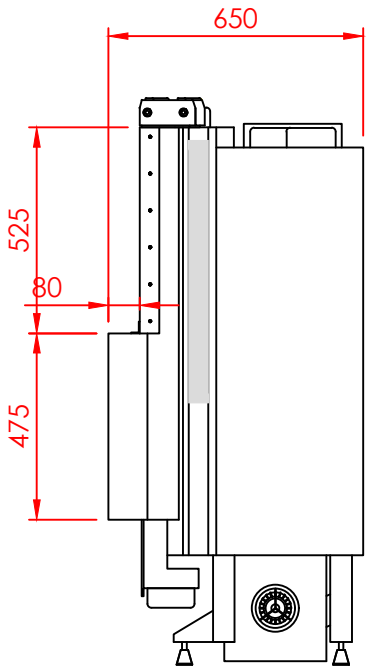

Side

Series:	FLAT
Model:	Architectural
Type:	90x42
Specials:	AERO

All dimensions in mm
General dimension tolerances up to 7mm
All illustrations and drawings are protected by copyright.
Exploitation or publication, even of individual details,
only with our permission.
Technical changes and errors reserved.

REGALFIRE

Nea Redestos. Thermi, 57001
Thessaloniki GREECE
t: +30 2310 461386 f: +30 2310 461493
e: info@regal.com.gr
www.tzakiaregal.gr | www.regal.com.gr